CLAY ELONGATED BOWL
4.2LPF / 1.1GPF

☐ **4765BOX** Top Inlet
☐ **4765BOU*** Rear Inlet (Special Order Only, See Price Book for Details)

(TOP INLET)
(REAR INLET)
GREEN

PRODUCT SPECS
- High efficiency flushometer valve bowl
- 4.2Lpf / 1.1Gpf
- Will also function with 4.8Lpf / 1.28Gpf flushometer valve
- Elongated bowl
- Vitreous china
- 16½" bowl height
- 10" (254mm) Rough-in
- 2" Fully glazed ball pass trapway
- Siphon jet flush action
- 1½" NPT Top inlet spud or back inlet spud
- Water surface: (220mm x 140mm) 8⅝" x 5½"
- Toilet seat and flushometer valve not included

DIMENSIONS
375mm W x 705mm D x 420mm H
14¾" W x 27¾" D x 16½" H

COMPLIANCE CERTIFICATIONS
Meets or exceeds the following:
- IAPMO cUPC
- ASME A112.19.2 / CSA B45.1
- ADA Guidelines & ANSI A117.1
- MaP tested 800g (Top Inlet)
- MaP tested 600g (Rear Inlet)
- US EPA WaterSense Version 1.0 Specification
  (To comply Water Sense Certification. Water Sense certified flushometer valve in 4.2Lpf/1.1Gpf should be used)
- IAMPO Green, Calgreen, and LEED Compliant
- NBC and OBC Section 3.8 Barrier Free design and CSA B651 Standard.

SHIPPING
Cube	4.55
GW	50 lbs

TO BE SPECIFIED
Colour:
■ Soft White

NOTES:

This toilet is designed to rough-in at a minimum dimension of 254mm (10") from finished wall to C/L of outlet. Flush valve not included with fixture and must be ordered separately.

Important: Dimensions of fixtures are nominal and may vary within the range of tolerances established by ASME standard A112.19.2. These measurements are subject to change or cancellation. No responsibility is assumed for use of superseded or voided pages.

Products are designed to comply ADA/ANSI A117.1 and NBC, OBC, CSA B651 accessibility Standard. It shall be the responsibility of the installer to comply with the local disability codes and standards prior to installing the product.

Bone and Biscuit available through Direct Import (CIF) only.

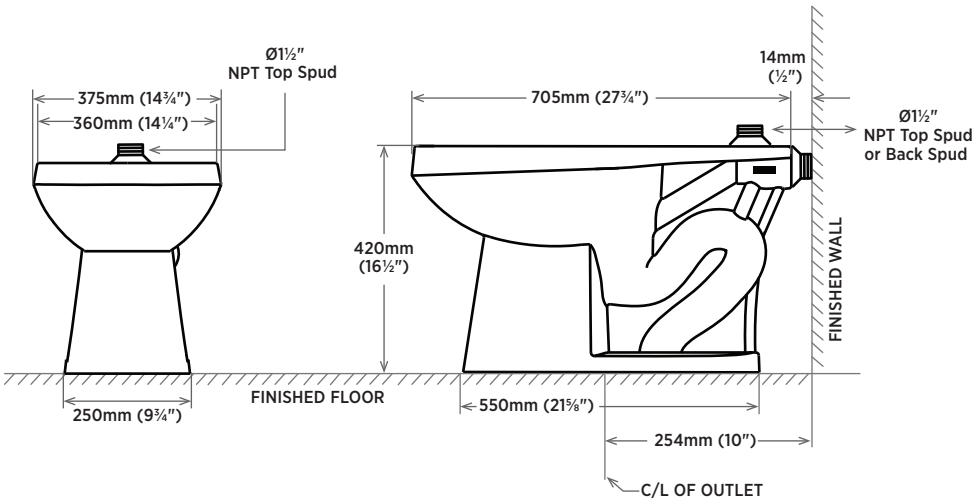

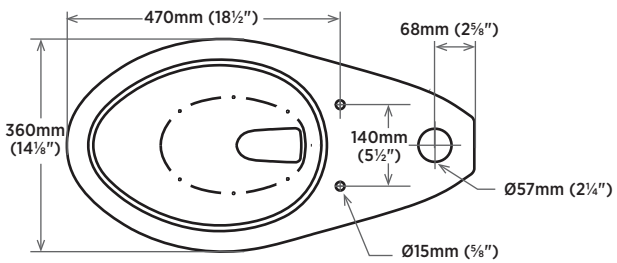

REVISED APRIL 2021